Schematic „Family tree“
of the heat resistant stainless steels

Deutsche Edelstahlwerke

Member of Swiss Steel Group

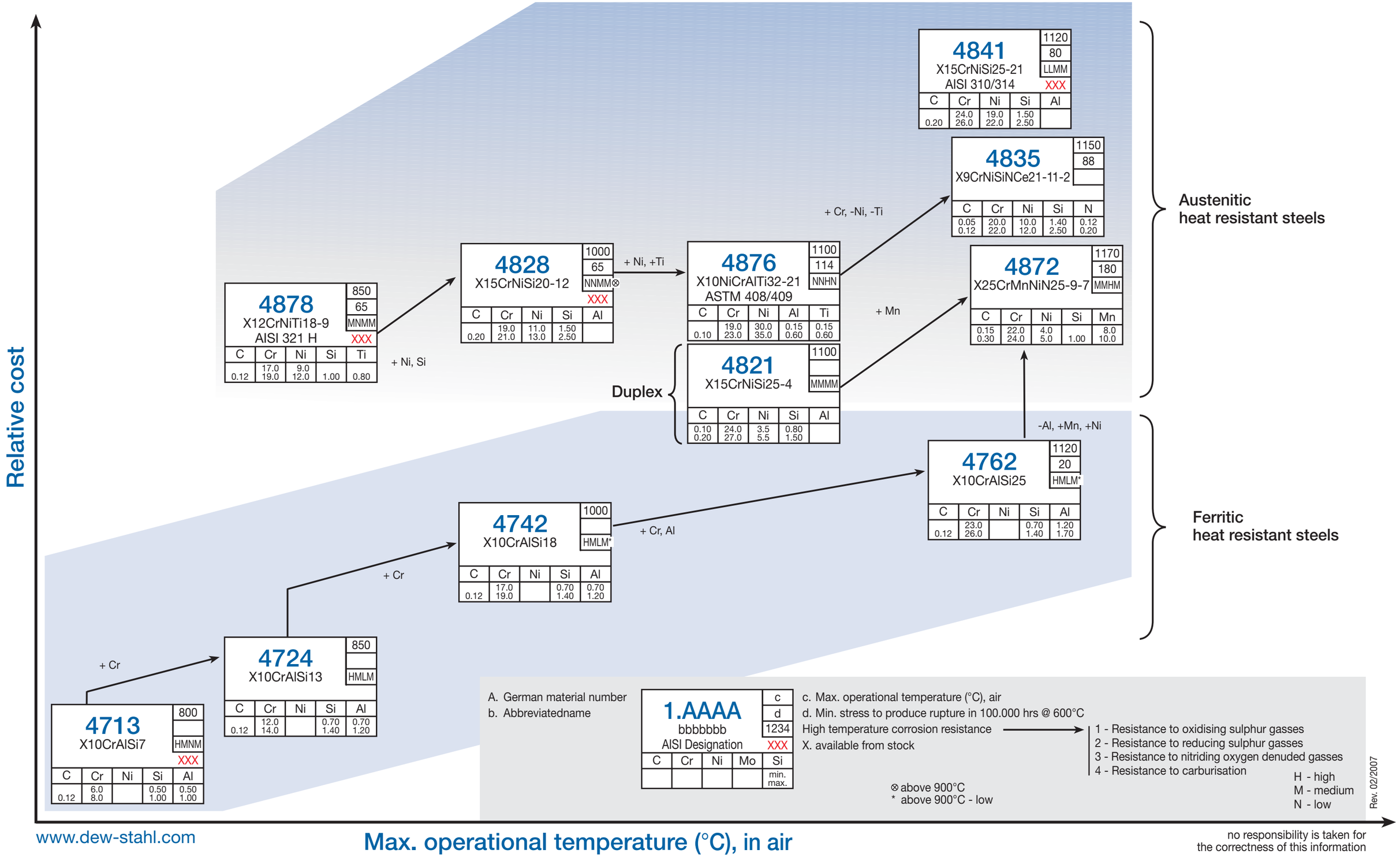

www.dew-stahl.com

no responsibility is taken for the correctness of this information